■ SCHEMATIC DIAGRAM

(This schematic diagram may be modified at any time with the development of new technology.)

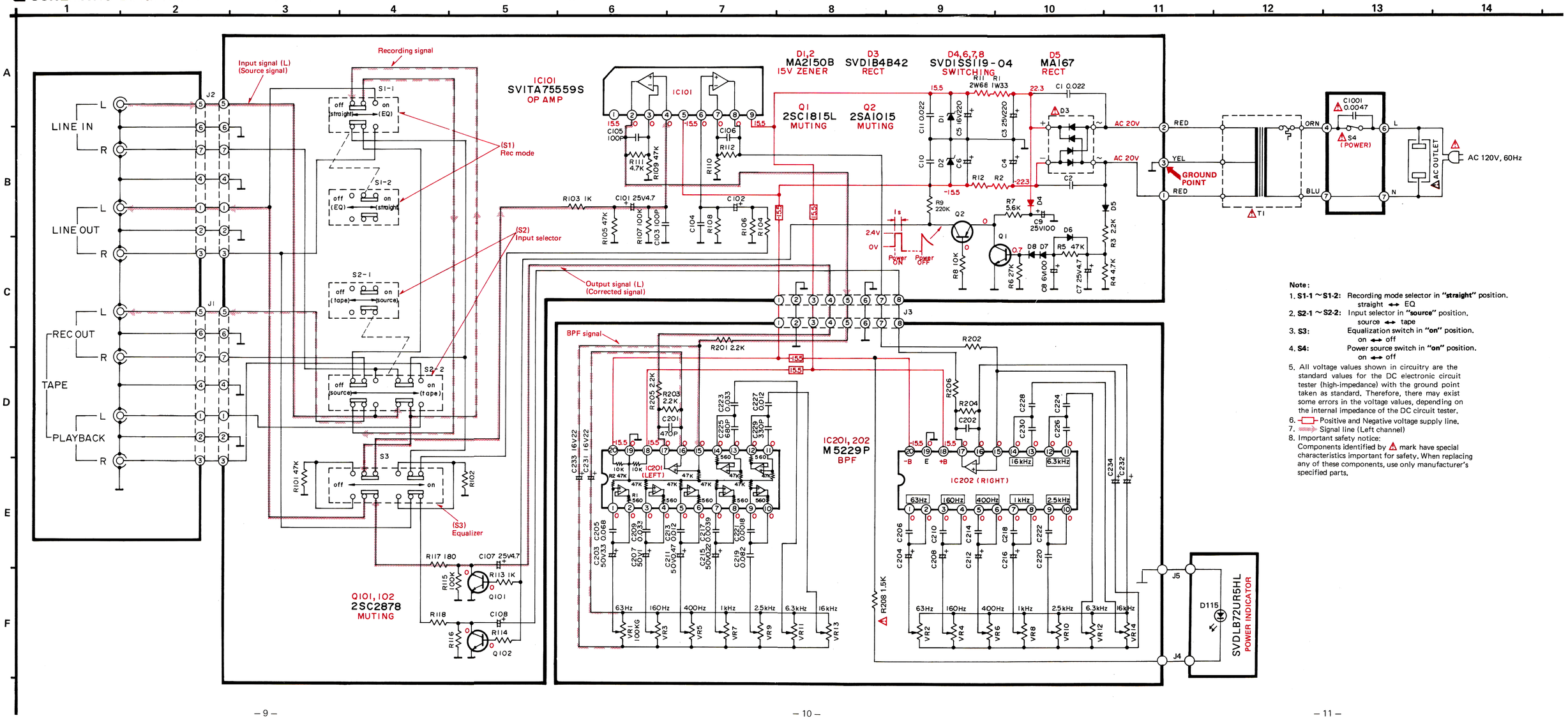

Note:

1. **S1-1 ~ S1-2:** Recording mode selector in **"straight"** position. straight ↔ EQ
2. **S2-1 ~ S2-2:** Input selector in **"source"** position. source ↔ tape
3. **S3:** Equalization switch in **"on"** position. on ↔ off
4. **S4:** Power source switch in **"on"** position. on ↔ off
5. All voltage values shown in circuitry are the standard values for the DC electronic circuit tester (high-impedance) with the ground point taken as standard. Therefore, there may exist some errors in the voltage values, depending on the internal impedance of the DC circuit tester.
6. Positive and Negative voltage supply line.
7. Signal line (Left channel)
8. Important safety notice: Components identified by ⚠ mark have special characteristics important for safety. When replacing any of these components, use only manufacturer's specified parts.